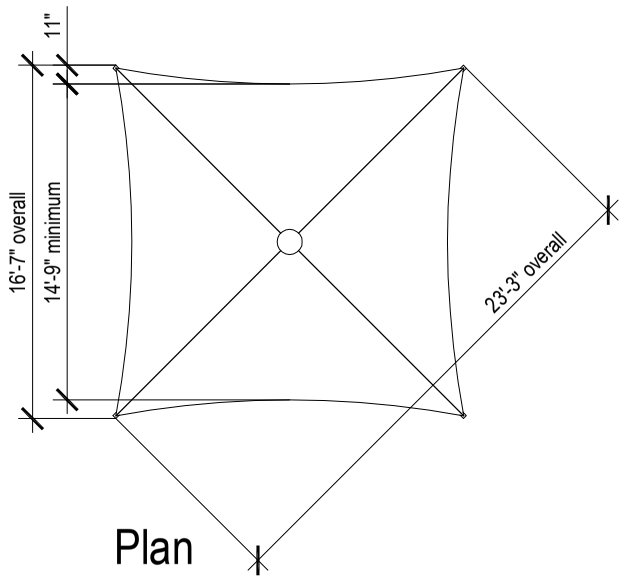

Plan

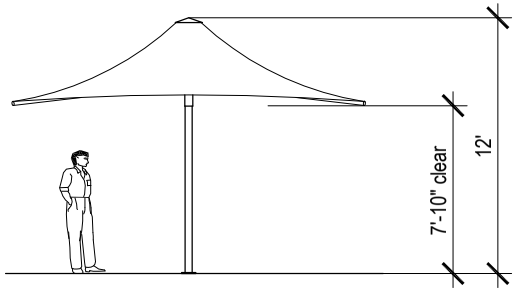

Elevation

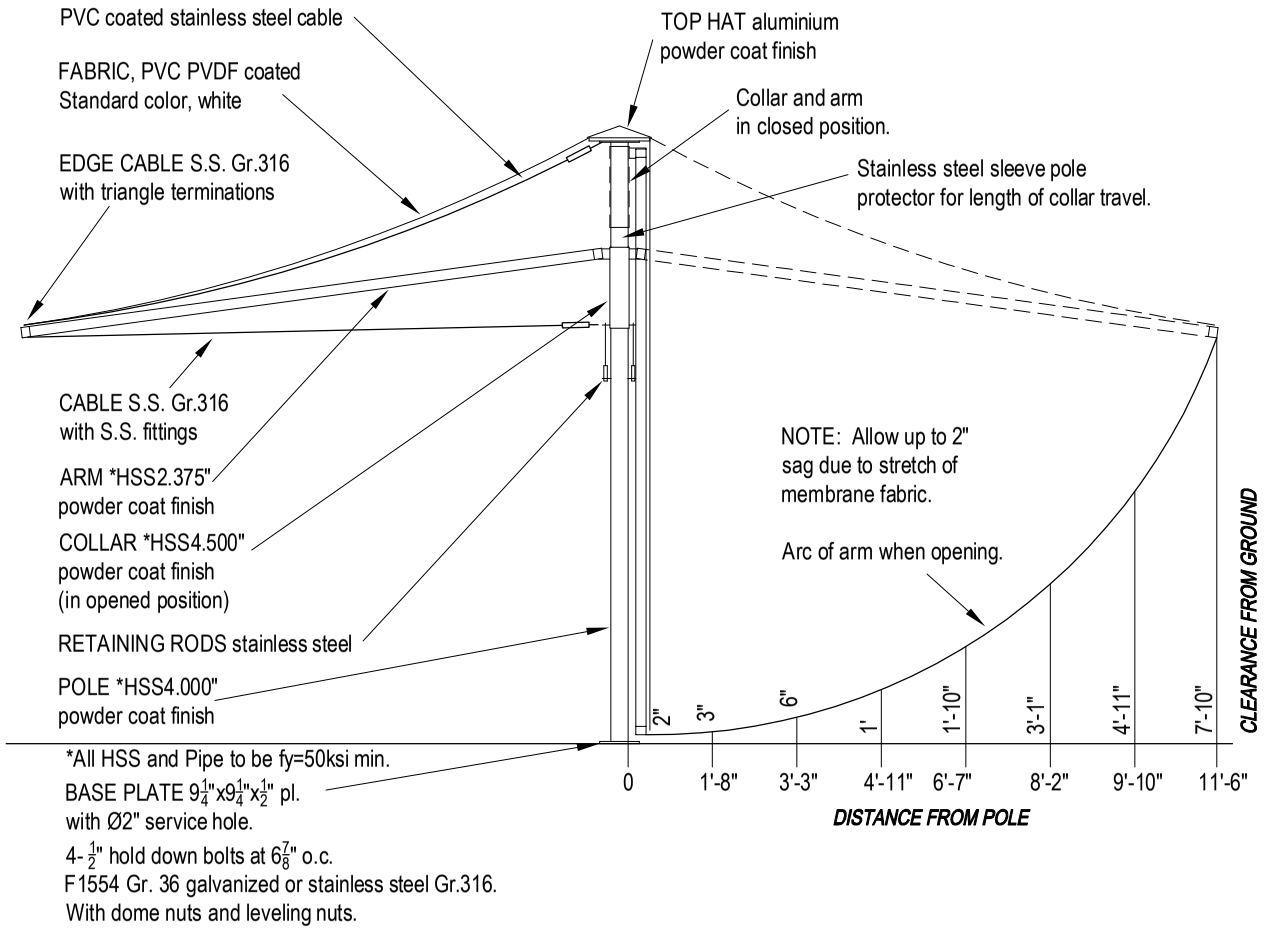

OPENED POSITION

CLOSED POSITION

CENTRA SQUARE 16'-7" - CS50
Designed to 90mph, Exp B
Rated when umbrella is fully erected.
Umbrella weight: 320 lb.

Overall dimensions represent clearance dimensions for the complete umbrella. Membrane dimensions differ, depending on variations in tensioning and fabrication. All dimensions are nominal and have a tolerance of +/- 2".

Note : The umbrellas must be closed and tied before wind speeds reach gusts of 60mph (100km/h) Refer note on Specification - Umbrella Design.

16'-7" Center Support Square Umbrella
Centra - Model CS50

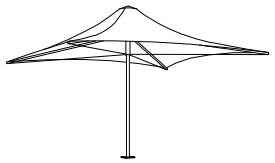

Centra Model CS50
Architectural Umbrellas

BIRDAIR

Figured dimensions take precedence. Do not scale.

Birdair Inc.

Engineering Framing EF-CS50-07.10

www.birdairumbrellas.com
sales@birdairumbrellas.com

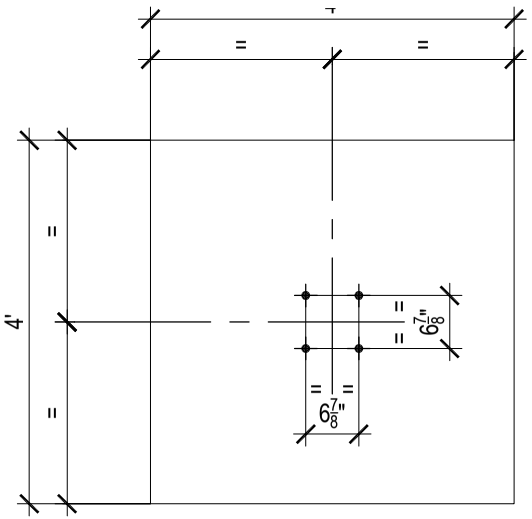

Plan

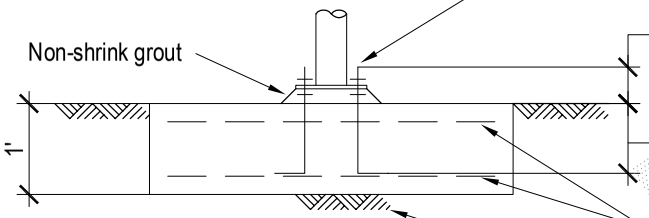

Elevation

4- 1/2" F1554 Gr. 36 galvanized H.D. bolts with nuts and leveling nuts - 4" hook to suit level of top of paving, tiling, etc

1 5/8" min
4 3/4" max.

9" embedment (cast in)

6x6-W5.5xW5.5 wire mesh, top & bottom

Natural Ground

CS50 - Pad Footing

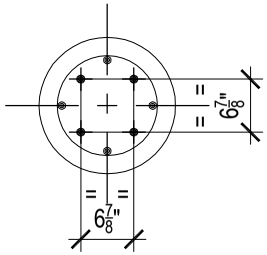

Plan

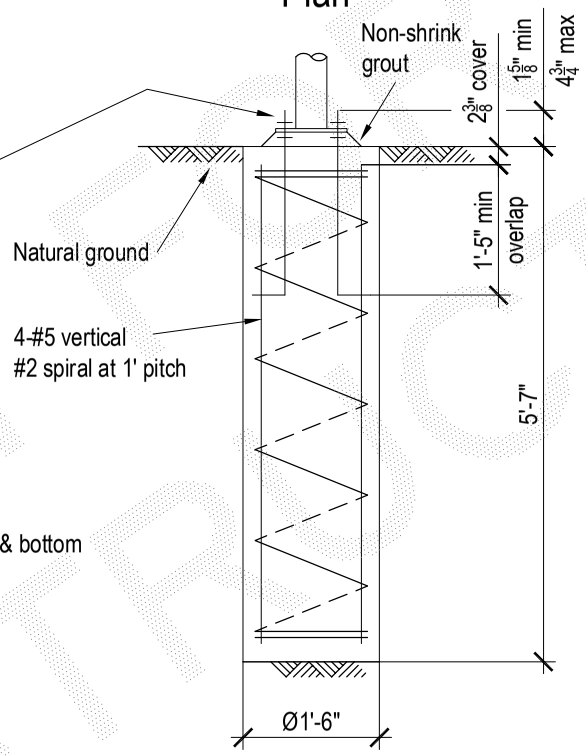

Elevation

CS50 - Pier Footing

Notes:
Designed to 90mph, Exp B

Assumed soil conditions:
Pad - bearing capacity 14.5 psf
Pier - cu=7.25 psf (stiff clay)

Minimum 2 3/8" cover to all reinforcement
Concrete strength - f'c 3600 psi
3/4" aggregate size
Slump 2 1/2"

Anchor bolt location tolerances per Australian Standard AS 4800-1998
- 3mm for anchor bolt centers within an anchor bolt group.
- 6mm for adjacent anchor bolt group centers.
- Maximum accumulation of 6mm per 30m not to exceed a total of 25mm.
- 6mm from anchor bolt group center to column line center.

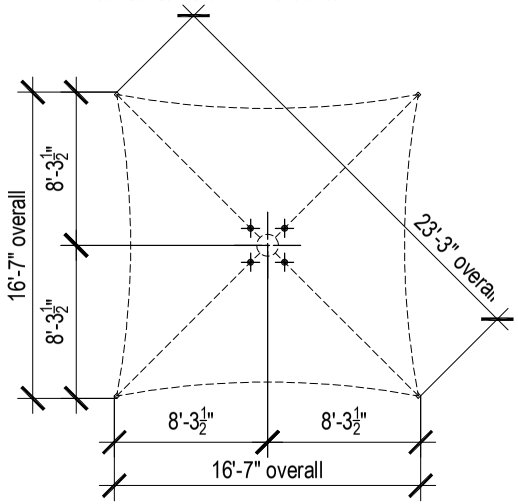

H.D. Bolt Layout Plan

Not to scale

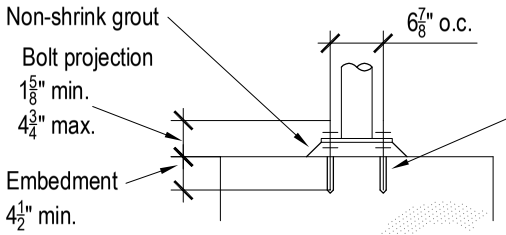

4- 1/2" H.D. bolts to be threaded rod grade F1554 Gr. 36 hot dipped galvanized, or stainless steel Gr.316. Supplied with nuts, washers and leveling nuts. Chemical anchors, at 6 7/8" x 6 7/8" centers to be **'Hilti HVU'**, or engineer approved equivalent, and to be installed in accordance with the manufacturer's instructions. Hole to be clean and dry at time of installation.

Chemical Anchor Detail

Centra Model CS50
Architectural Umbrellas

Birdair Inc.

Footing Detail FD-CS50-08.10

BIRDAIR
www.birdairumbrellas.com
sales@birdairumbrellas.com

Figured dimensions take precedence. Do not scale.