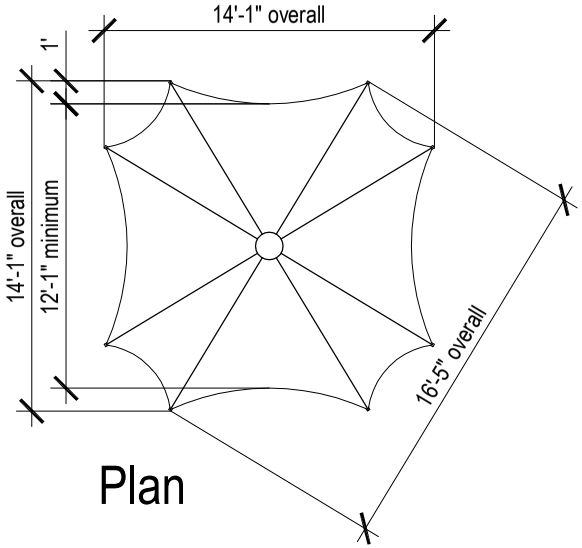

Plan

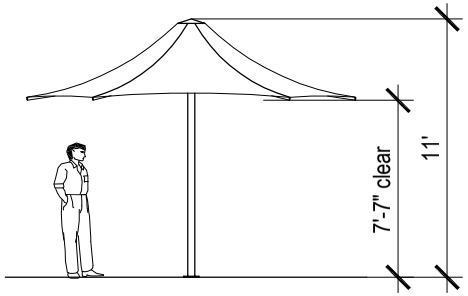

Elevation

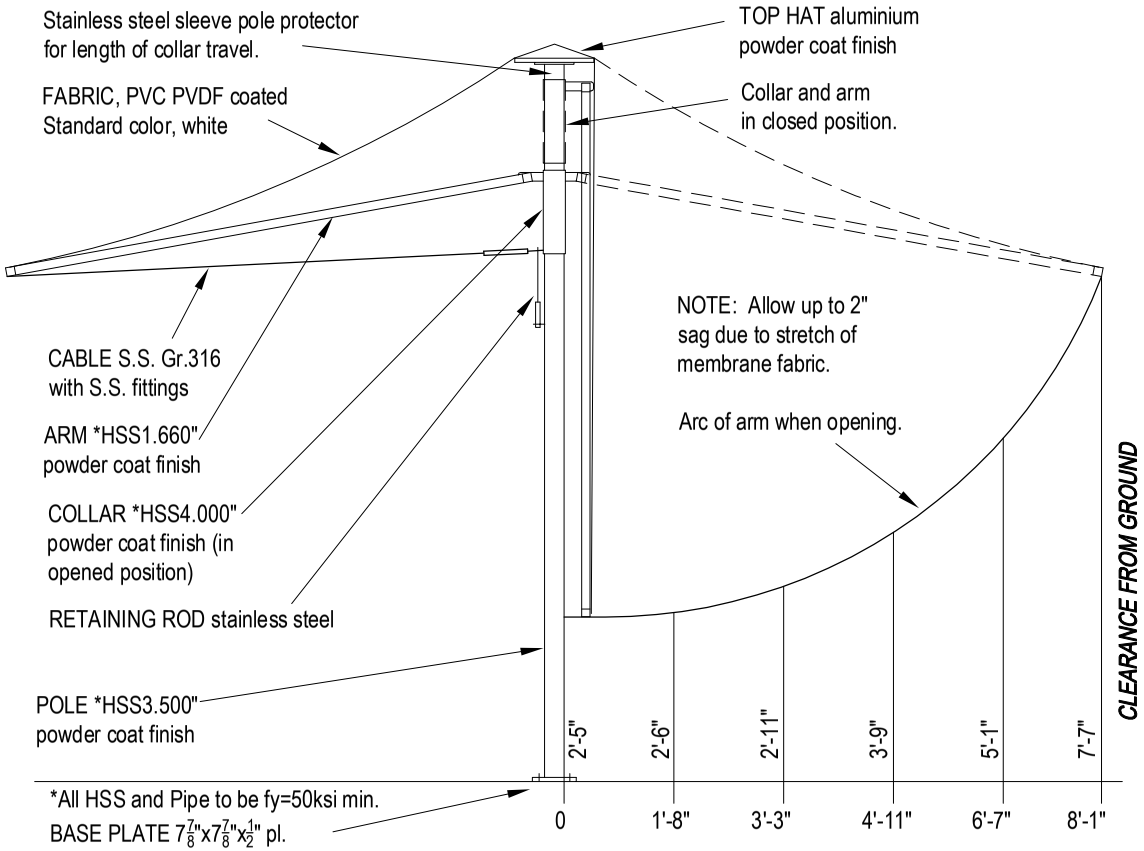

*All HSS and Pipe to be fy=50ksi min.
BASE PLATE $7\frac{7}{8}$"x$7\frac{7}{8}$"x$\frac{1}{2}$" pl. with Ø2" service hole.
4- $\frac{1}{2}$" hold down bolts at $5\frac{1}{2}$" o.c.
F1554 Gr. 36 galvanized or stainless steel Gr.316.
With dome nuts and leveling nuts.

OPENED POSITION

CLOSED POSITION

CENTRA TRUNCATED SQUARE 14'-1" - CTS43
Designed to 90mph, Exp B
Rated when umbrella is fully erected.
Umbrella weight: 194 lb.
Overall dimensions represent clearance dimensions for the complete umbrella.
Membrane dimensions differ, depending on variations in tensioning and fabrication.
All dimensions are nominal and have a tolerance of +/- 2"

Note : The umbrellas must be closed and tied before wind speeds reach gusts of 60mph (100km/h) Refer note on Specification - Umbrella Desig

14'-1" Center Support Truncated Square Umbrella
Centra - Model CTS43

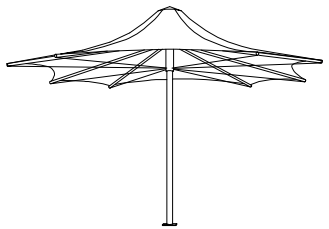

Centra Model CTS43
Architectural Umbrellas

BIRDAIR

Figured dimensions take precedence. Do not scale.

Birdair Inc.

Engineering Framing EF-CTS43-07.10

www.birdairumbrellas.cc
sales@birdairumbrellas.cc

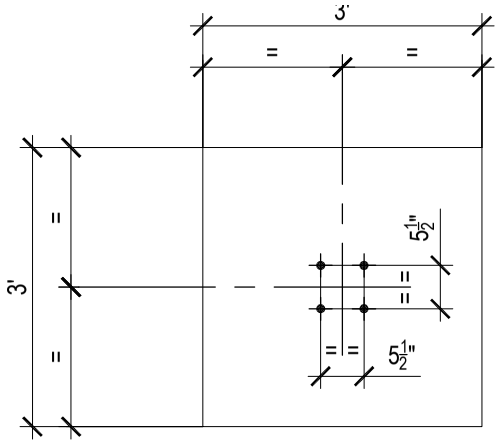

Plan

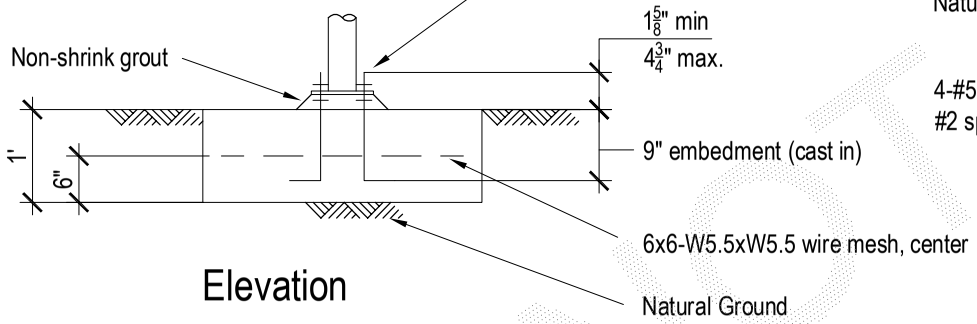

Elevation

CTS43 - Pad Footing

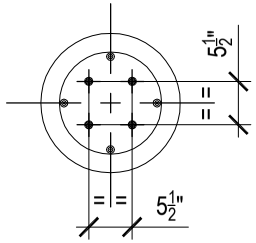

Plan

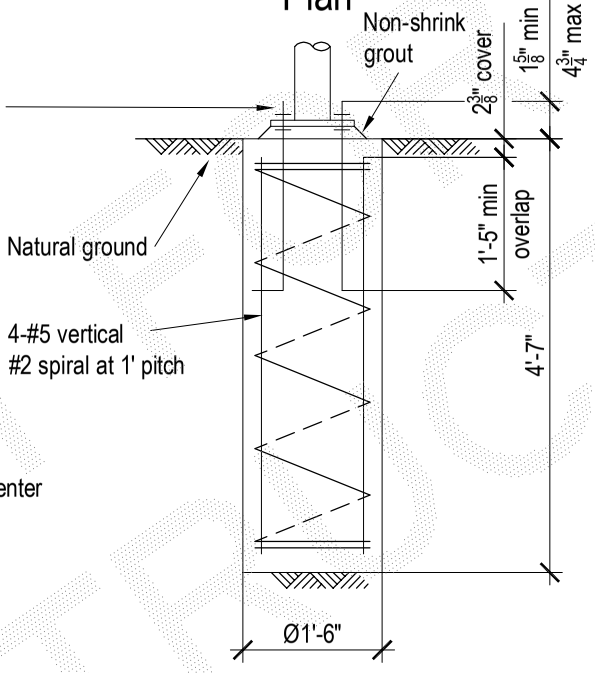

Elevation

CTS43 - Pier Footing

Notes:
Designed to 90mph, Exp B

Assumed soil conditions:
Pad - bearing capacity 14.5 psf
Pier - cu=7.25 psf (stiff clay)

Minimum $2\frac{3}{8}$" cover to all reinforcement
Concrete strength - f'c 3600 psi
$\frac{3}{4}$" aggregate size
Slump $2\frac{1}{2}$"

Anchor bolt location tolerances per Australian Standard AS 4800-1998
- 3mm for anchor bolt centers within an anchor bolt group.
- 6mm for adjacent anchor bolt group centers.
- Maximum accumulation of 6mm per 30m not to exceed a total of 25mm.
- 6mm from anchor bolt group center to column line center.

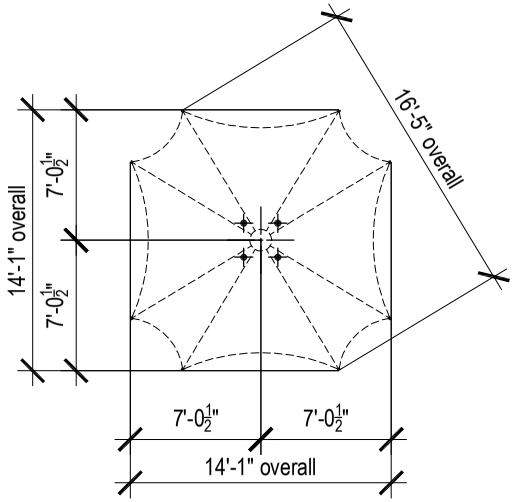

H.D. Bolt Layout Plan
Not to scale

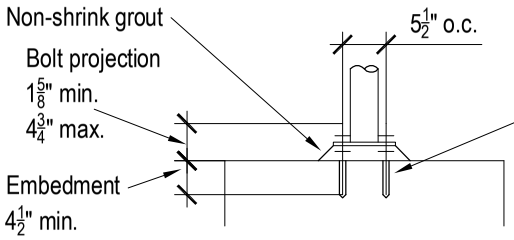

4- $\frac{1}{2}$" H.D. bolts to be threaded rod grade F1554 Gr. 36 hot dipped galvanized, or stainless steel Gr.316. Supplied with nuts, washers and leveling nuts. Chemical anchors, at $5\frac{1}{2}$" x $5\frac{1}{2}$" centers to be **'Hilti HVU'**, or engineer approved equivalent, and to be installed in accordance with the manufacturer's instructions. Hole to be clean and dry at time of installation.

Chemical Anchor Detail

Centra Model CTS43
Architectural Umbrellas

BIRDAIR

Birdair Inc.

Footing Detail FD-CTS43-08.10

www.birdairumbrellas.com
sales@birdairumbrellas.com

Figured dimensions take precedence. Do not scale.