LEVA SQUARE 18' - LS54
Designed to 90mph, Exp B
Rated when umbrella is fully erected.
Umbrella weight: 368 lb.
Boom weight: 573 lb.

Overall dimensions represent clearance dimensions for the complete umbrella. Membrane dimensions differ, depending on variations in tensioning and fabrication. All dimensions are nominal and have a tolerance of +/- 2".

Note : The umbrellas must be closed and tied before wind speeds reach gusts of 60mph (100km/h) Refer note on Specification - Umbrella Design.

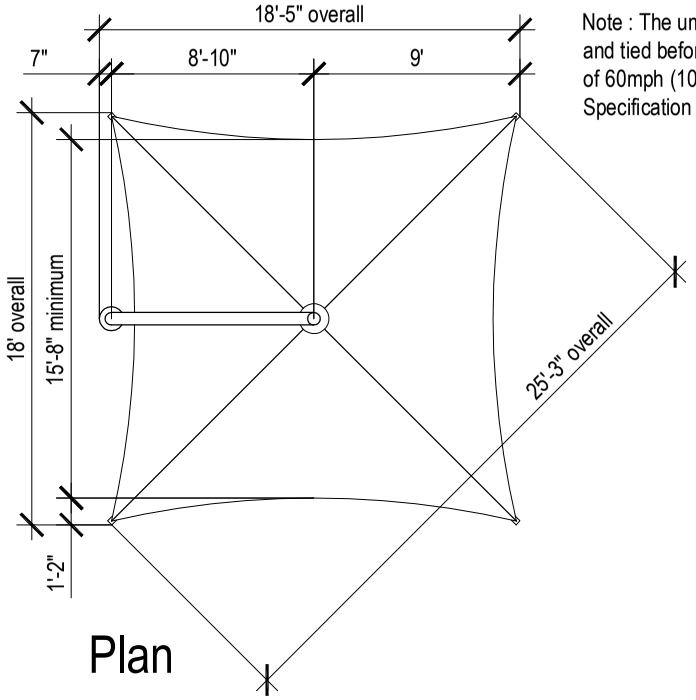

Plan

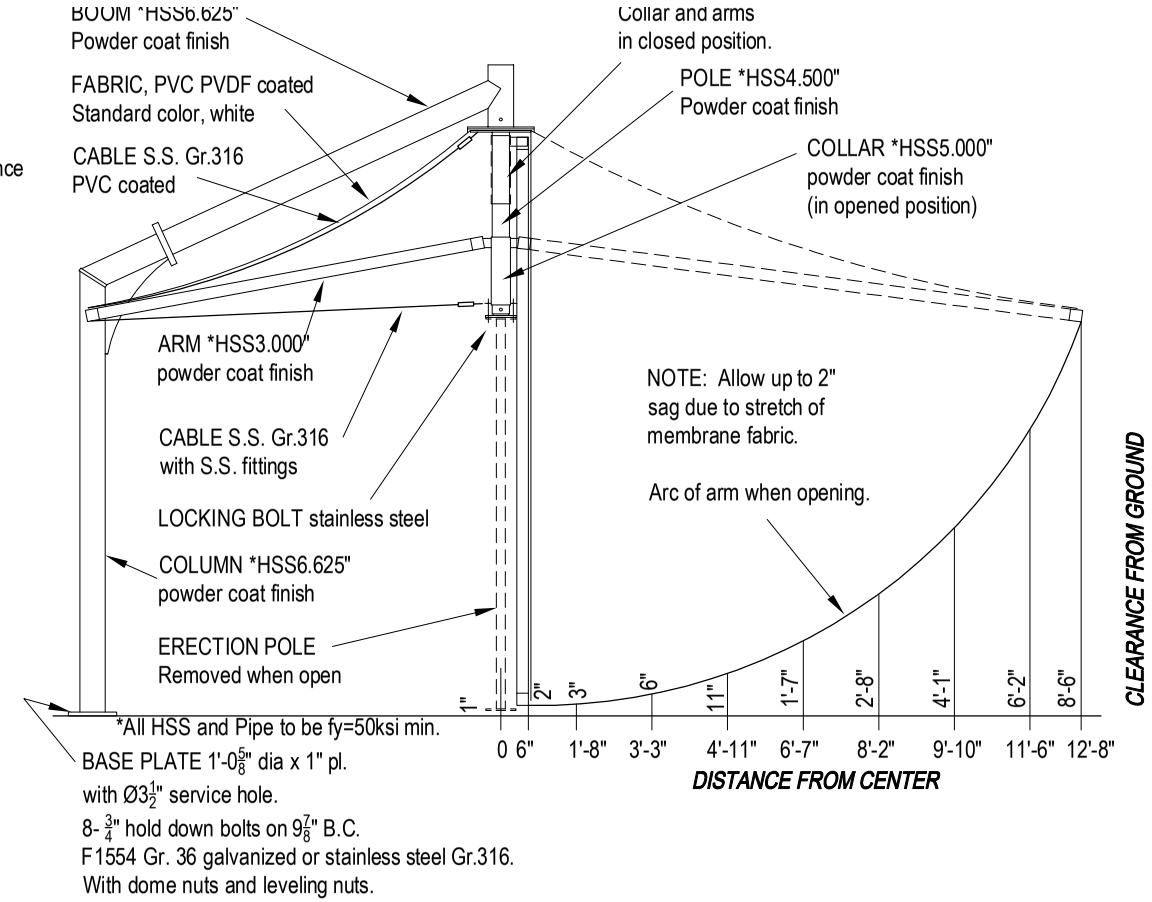

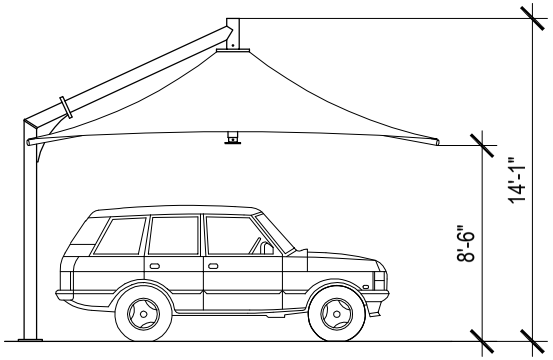

Side Elevation

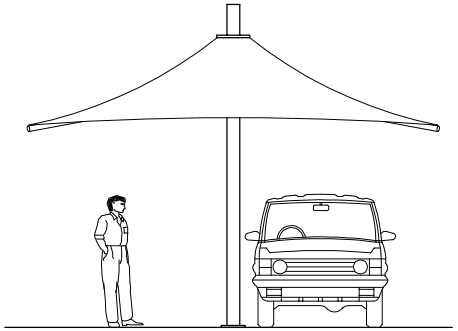

Elevation

OPENED POSITION
View square to boom

CLOSED POSITION
View square to arm

18' Side Support Square Umbrella
Leva - Model LS54

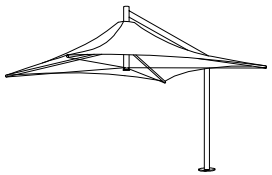

Leva Model LS54
Architectural Umbrellas

BIRDAIR

Birdair Inc. | Engineering Framing | EF-LS54-07.10

www.birdairumbrellas.com
sales@birdairumbrellas.com

Figured dimensions take precedence. Do not scale.

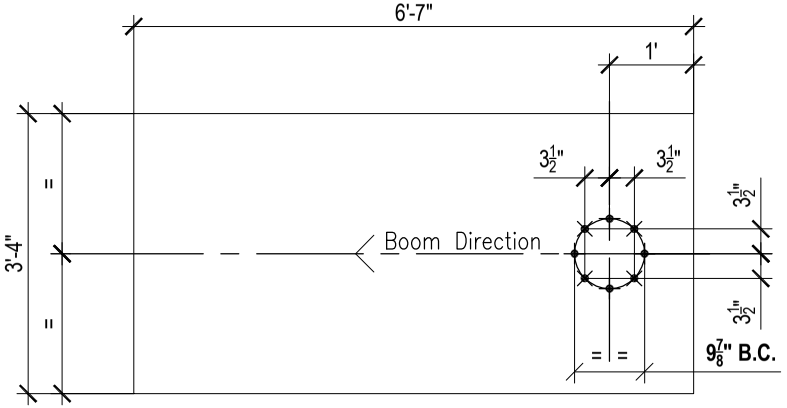

Plan

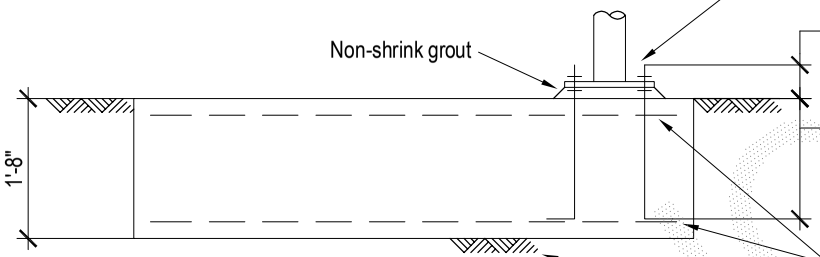

Elevation

8-¾" F1554 Gr. 36 galvanized H.D. bolts with nuts and leveling nuts - 4" hook to suit level of top of paving, tiling, etc

2⅜" min
6" max.

1'-5" embedment (cast in)

6x6-W5.5xW5.5 wire mesh top & bottom

Natural Ground

LS54 - Pad Footing

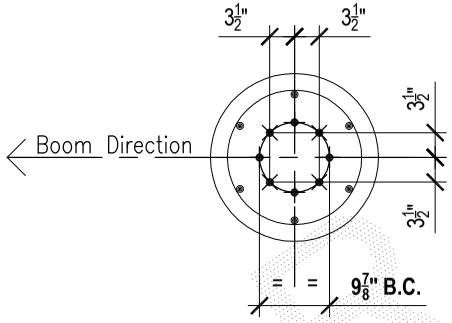

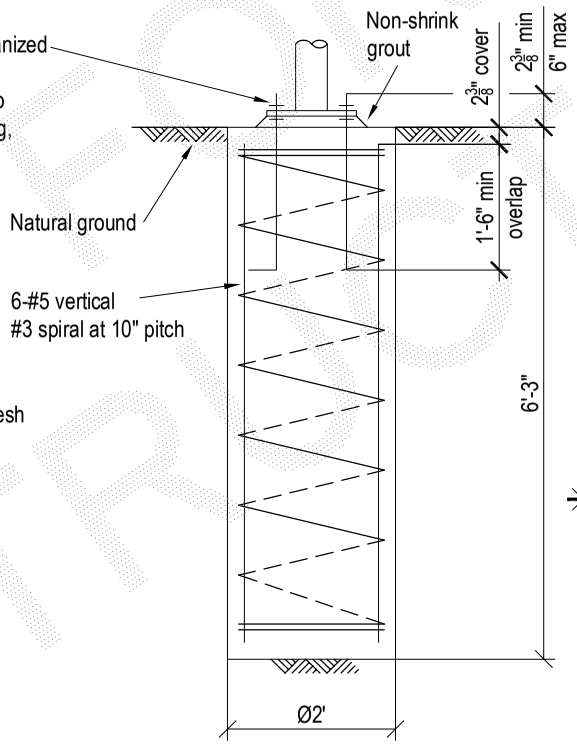

Elevation

LS54 - Pier Footing

Notes:
Designed to 90mph, Exp B

Assumed soil conditions:
Pad - bearing capacity 14.5 psf
Pier - cu=7.25 psf (stiff clay)

Minimum 2⅜" cover to all reinforcement
Concrete strength - f'c 3600 psi
¾" aggregate size
Slump 2½"

Anchor bolt location tolerances per Australian Standard AS 4800-1998
- 3mm for anchor bolt centers within an anchor bolt group.
- 6mm for adjacent anchor bolt group centers.
- Maximum accumulation of 6mm per 30m not to exceed a total of 25mm.
- 6mm from anchor bolt group center to column line center.

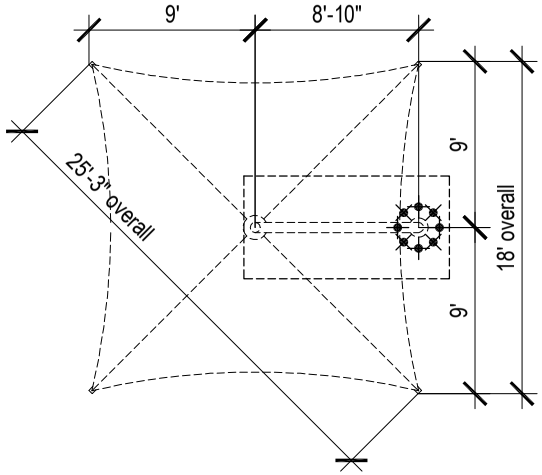

H.D. Bolt Layout Plan

Not to scale

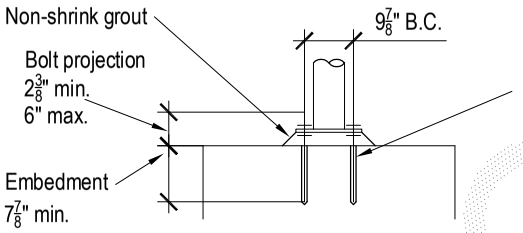

8-¾" H.D. bolts to be threaded rod F1554 Gr. 36 hot dipped galvanized, or stainless steel Gr.316. Supplied with nuts, washers and leveling nuts.

Chemical anchors, on 9⅞" B.C., to be **Ramset Reo 502 (or 'Hilti HIT-RE 500')**, or engineer approved equivalent, and to be installed in accordance with the manufacturer's instructions.

Chemical Anchor Detail

Leva Model LS54
Architectural Umbrellas

BIRDAIR

Birdair Inc.

Footing Detail FD-LS54-08.10

www.birdairumbrellas.com
sales@birdairumbrellas.com

Figured dimensions take precedence. Do not scale.