ST TROPEZ SERIES - 19'-8" Square
Model ST60 (Contour Edge)

Designed to 90mph, Exp C

- Overall dimensions represent clearance dimensions for the complete structure.
- A minimum of 4" clearance to any buildings, poles etc. is recommended.

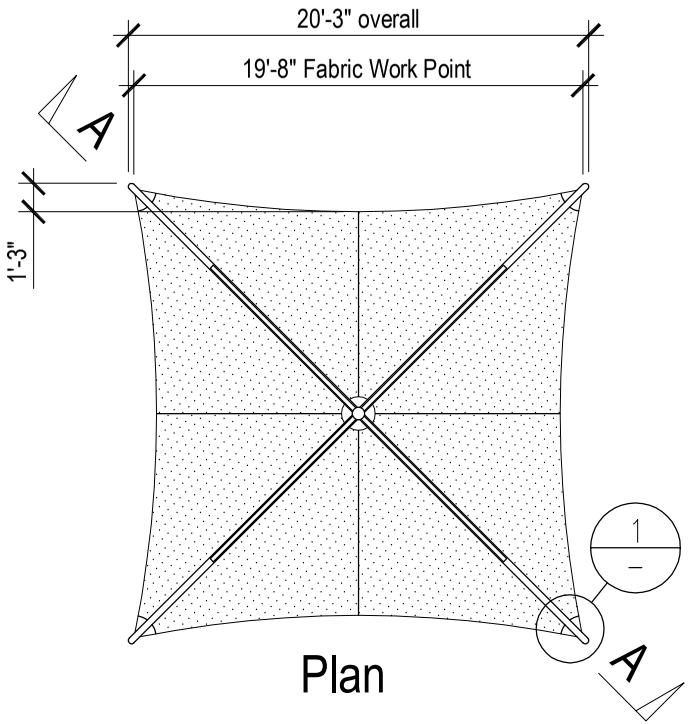

Plan

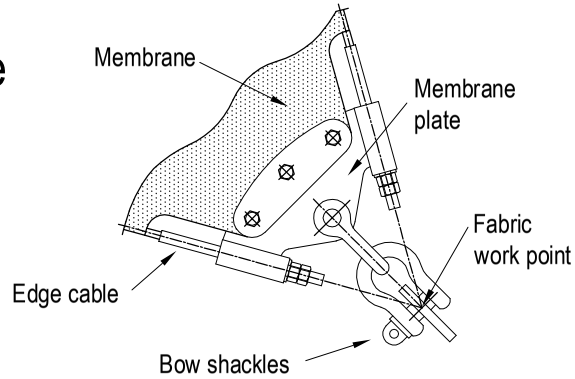

DETAIL 1 / –
Not to scale

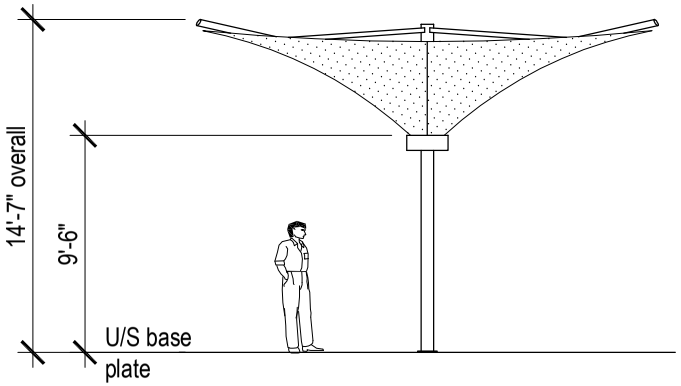

Elevation

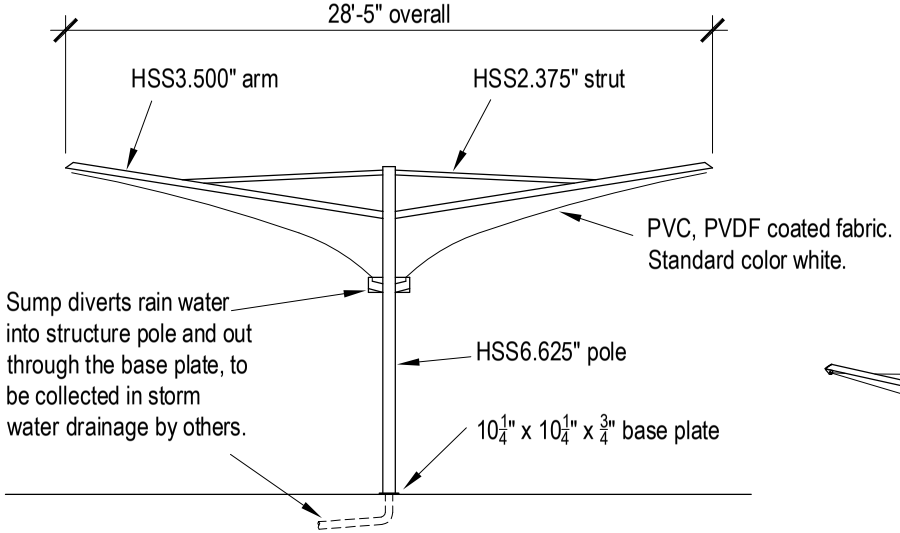

Section A-A

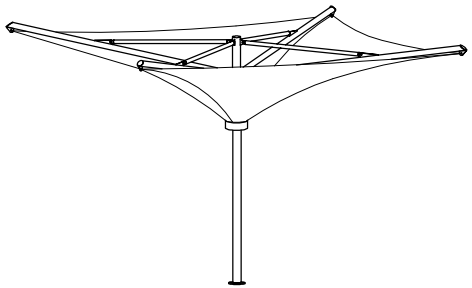

St Tropez Model ST60 Modular	
Engineering Framing	ST60-1101-08.10

Birdair Inc.

BIRDAIR

www.birdairumbrellas.com
sales@birdairumbrellas.com

Figured dimensions take precedence. Do not scale.