ST TROPEZ SERIES - 23' Square
Model ST70 (Contour Edge)

Designed to 90mph, Exp C

- Overall dimensions represent clearance dimensions for the complete structure.
- A minimum of 4" clearance to any buildings, poles etc. is recommended.

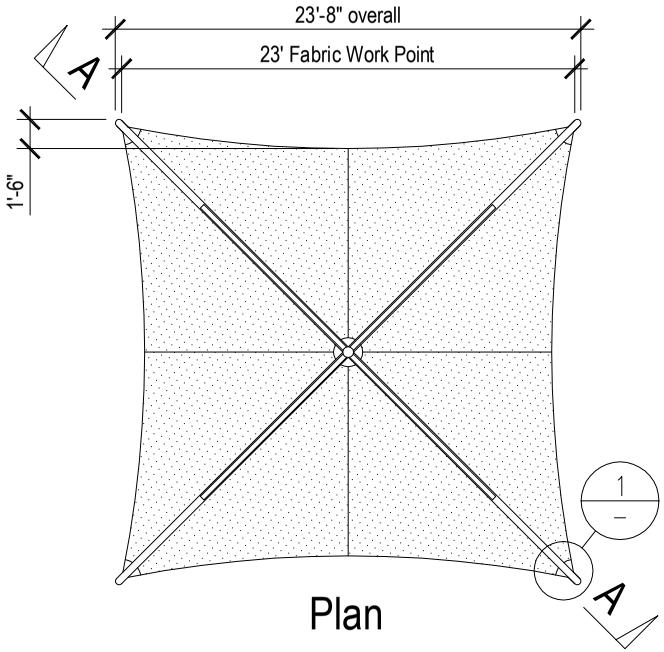

Plan

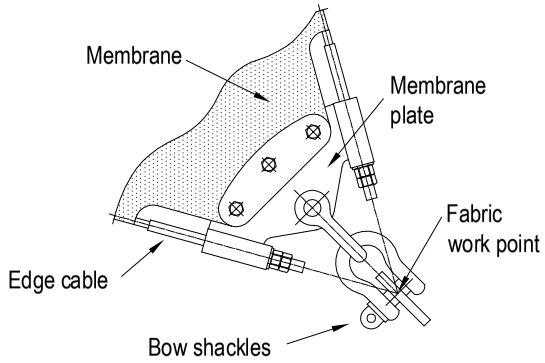

DETAIL 1 / –
Not to scale

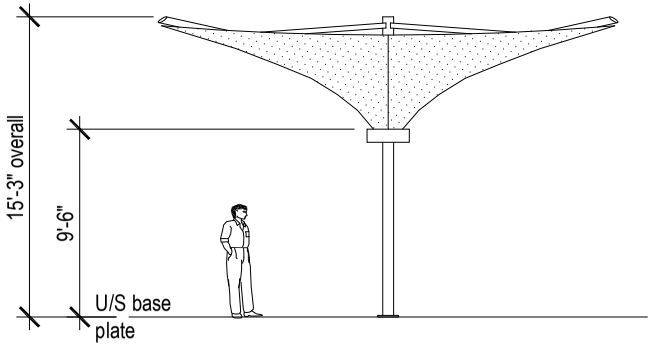

Elevation

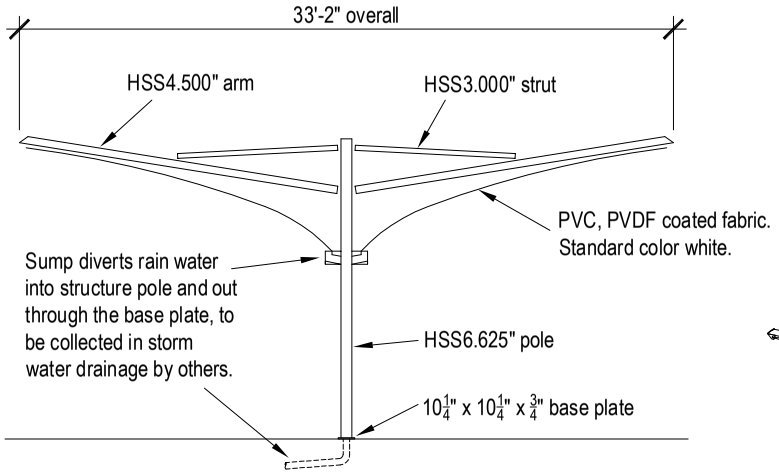

Section A-A

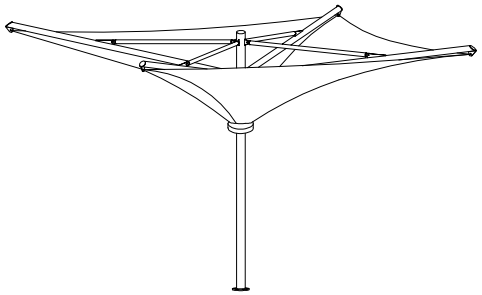

St Tropez Model STS70 Modular Systems	BIRDAIR
Engineering Framing	ST70-1101-05.06

Birdair, Inc.

www.birdairumbrellas.com
sales@birdairumbrellas.com

Figured dimensions take precedence. Do not scale.