ST TROPEZ SERIES - 26'-3" Square
Model ST80 (Contour Edge)

Designed to 90mph, Exp C

- Overall dimensions represent clearance dimensions for the complete structure.
- A minimum of 4" clearance to any buildings, poles etc. is recommended.

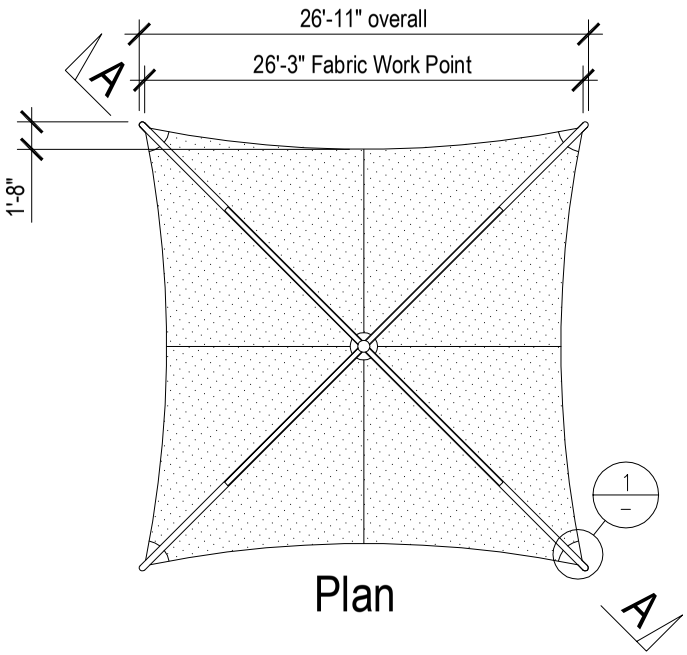

Plan

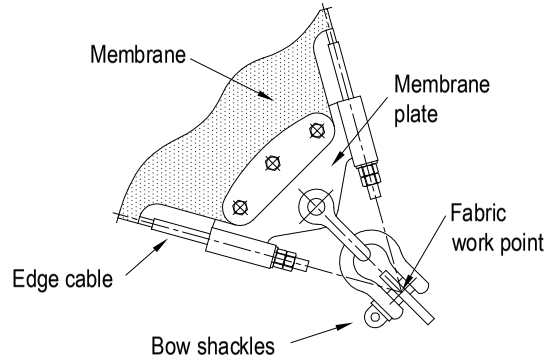

DETAIL 1 –
Not to scale

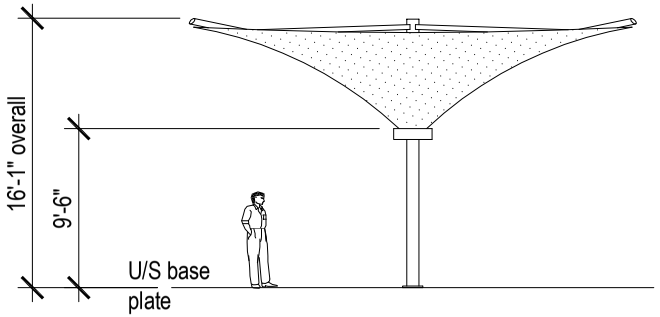

Elevation

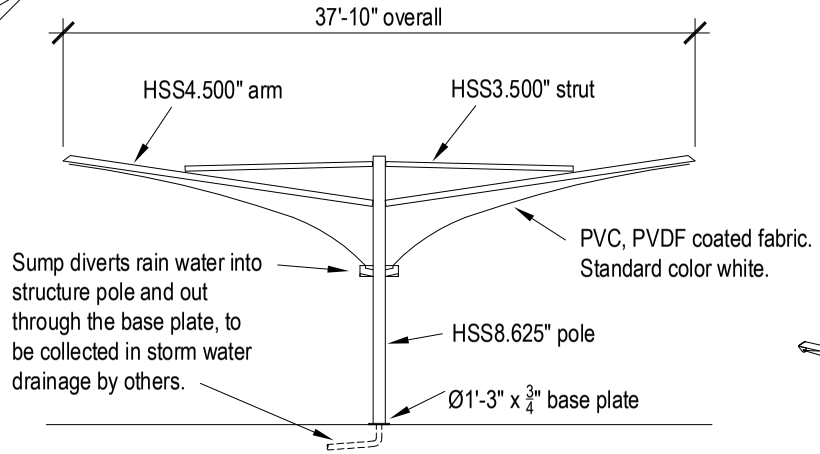

Section A-A

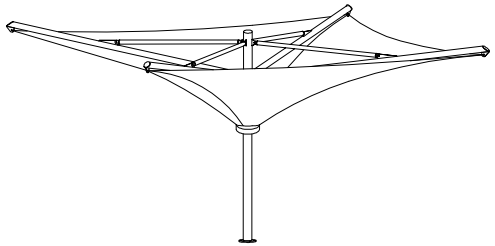

St Tropez Model ST80 Modular Systems	
Engineering Framing	ST80-1101-12.04

Birdair, Inc.

BIRDAIR

www.birdairumbrellas.com
sales@birdairumbrellas.com

Figured dimensions take precedence. Do not scale.